Water Service

Water Line Connection Details D-201
Valve Installation D-203
Pressure Reducer Valve Assembly 8’ Dia-cast Manhole D-204.1
Pressure Reducer Valve Assembly 6’ x 8’ Pre-cast Vault D-204.2
Riser Detail D-204.3
Blow Off Valve Assembly Detail D-206
Fire Hydrant D-207.1
Fire Hydrant Offset Alternate D-207.2
Fire Hydrant (Top View) D-207.3
Air Relief Valve Assembly (6” – 12” Pipe) D-208
Air Relief Valve Assembly (16” or greater) D-209
Thrust Blocks D-210
Stationary Water Line Location Marker D-212
Water Service Connection 5/8” Meter D-220
Water Service Connection 1” Meter D-221
Water Service Connection 1-1/2” Meter D-222
Water Service Connection 2” Meter D-223
Water Service Manifold Detail D-224

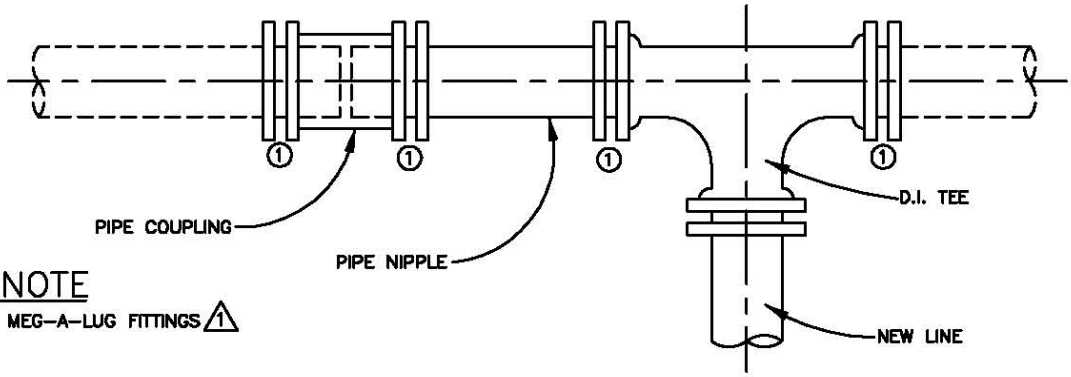

NOTE

1 MEG-A-LUG FITTINGS 1

CUTTING TEE INTO EXISTING LINE

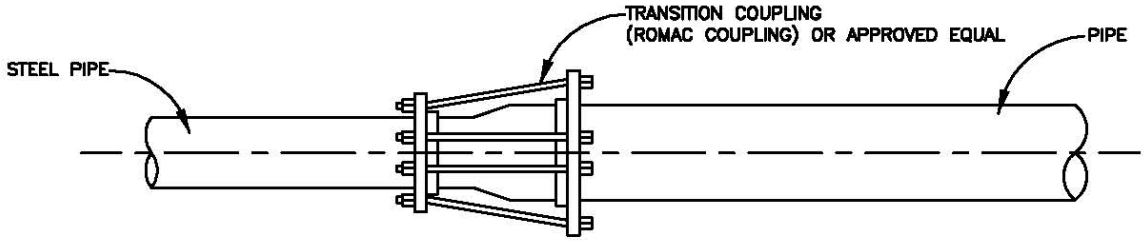

CONNECTING UNLIKE PIPE MATERIALS

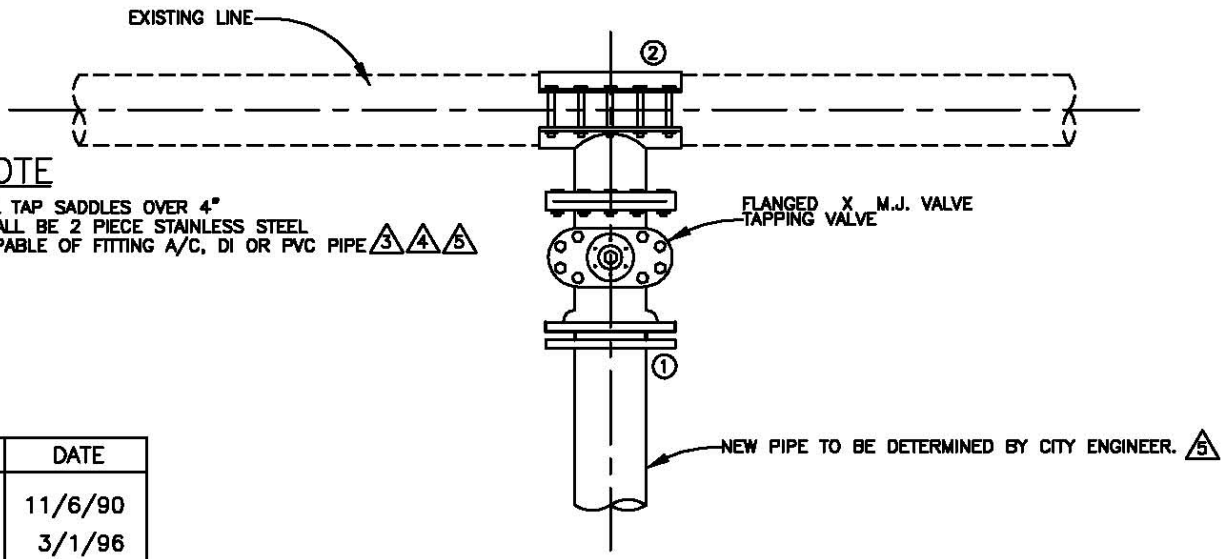

NOTE

2 ALL TAP SADDLES OVER 4"
SHALL BE 2 PIECE STAINLESS STEEL
CAPABLE OF FITTING A/C, DI OR PVC PIPE 3 4 5

WET TAP TO EXISTING LINE

REV.	DATE
1	11/6/90
2	3/1/96
3	1/31/97
4	2/1/05
5	12/02/05

CONSTRUCTION STANDARDS

WATER LINE CONNECTION DETAILS

STANDARD No. D-201 SHEET 1 OF 1

CITY OF AZTEC

PUBLIC WORKS DEPARTMENT

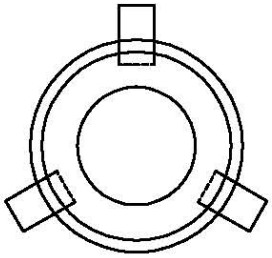

SET BASE ON BRICK OR FLAT STONE AFTER BACKFILLING PIPE 2

PLAN

COVER–CLOW F–2493 "STAY–PUT" TYPE (OR CITY APPROVED EQUAL) 3

24" x 24" x 4" CONCRETE APRON IN NON–PAVED AREAS.

1 2 CONCRETE COLLAR PER D–311

TWO PIECE SCREW TYPE VALVE BOX – CLOW TYPE F–2454 (OR CITY APPROVED EQUAL) 3

BRICK OR FLAT STONE

2 GATE VALVE OR BUTTERFLY VALVE

GATE VALVE

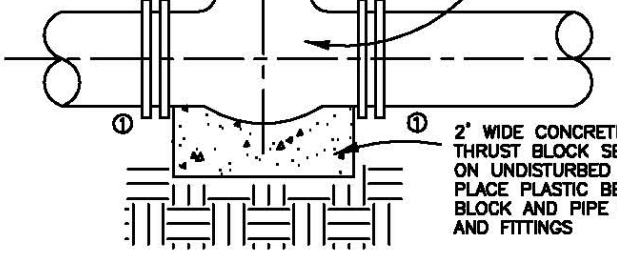

① ①

2' WIDE CONCRETE* THRUST BLOCK SET ON UNDISTURBED EARTH PLACE PLASTIC BETWEEN BLOCK AND PIPE VALVES AND FITTINGS

SECTION

*PRE–MIXED CONCRETE BAGS MAY BE USED WITH CITY ENGINEER APROVAL.

NOTE

① MEG–A–LUG WEDGE ACTION JOIST RESTRAINT, SERIES – 1100 FOR CAST IRON OR DUCTILE, SERIES – 1100 PV FOR CAST IRON SIZE PVC (TYPICAL)

REV.	DATE
1	1/20/99
2	11/19/04
3	12/02/05

CONSTRUCTION STANDARDS

VALVE INSTALLATION

STANDARD No. D–203 SHEET 1 OF 1

CITY OF AZTEC

PUBLIC WORKS DEPARTMENT

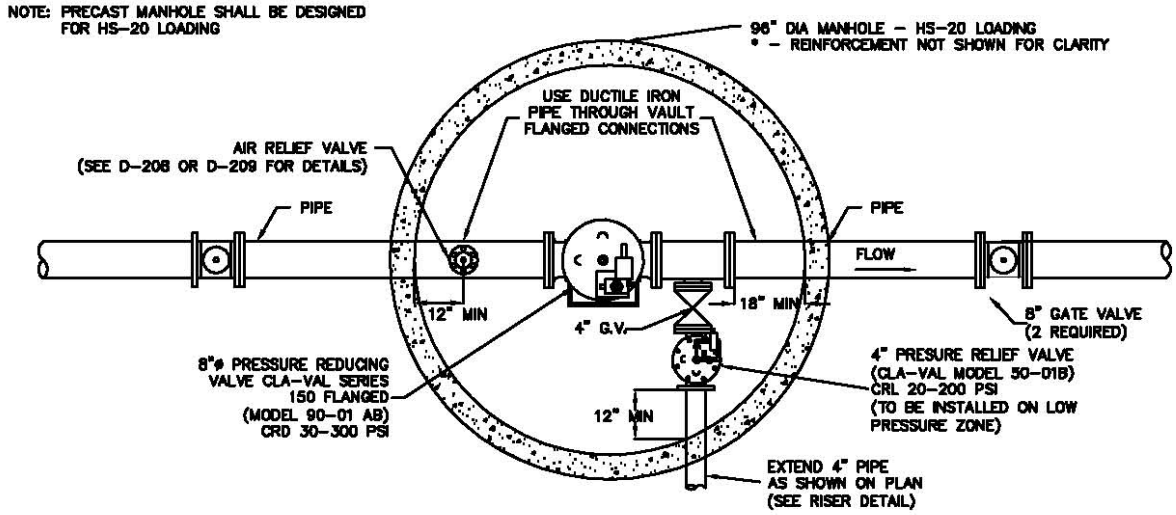

PLAN VIEW

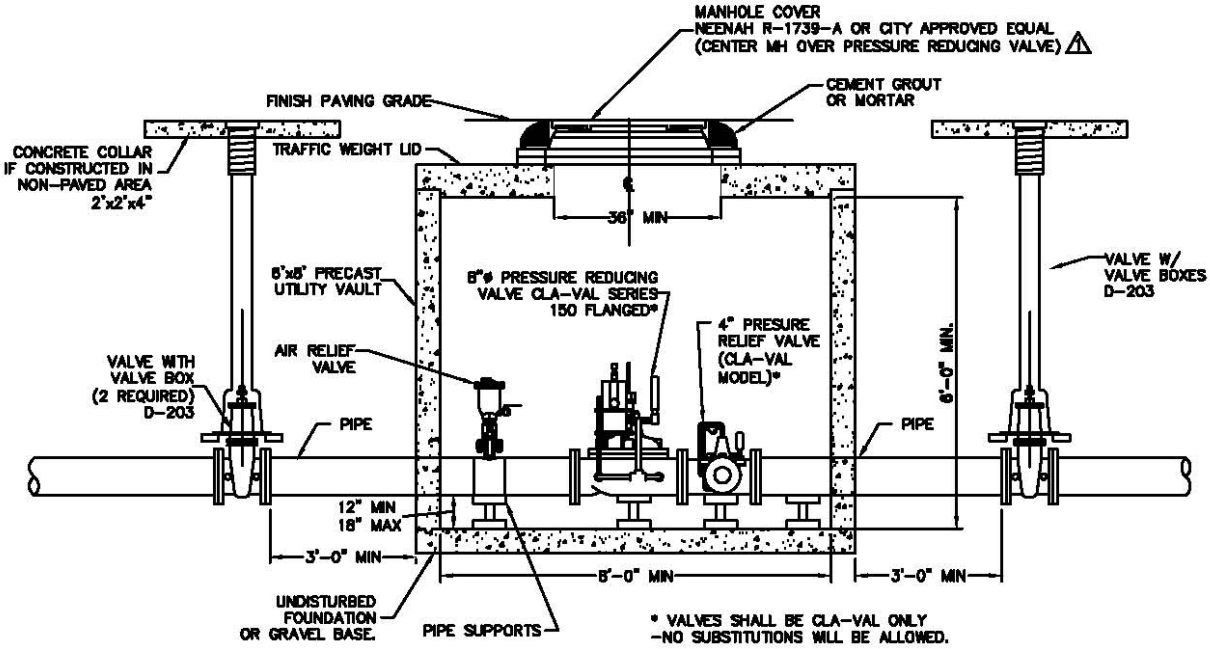

SECTION VIEW

REV.	DATE
1	12/09/05

NOT TO SCALE

CONSTRUCTION STANDARDS

PRESSURE REDUCER VALVE ASSEMBLY 8' DIA PRE-CAST MANHOLE

STANDARD No. D-204 SHEET 1 OF 3

CITY OF AZTEC

PUBLIC WORKS DEPARTMENT

NOTES
PRECAST VAULT SHALL BE DESIGNED FOR HS-20 LOADING.

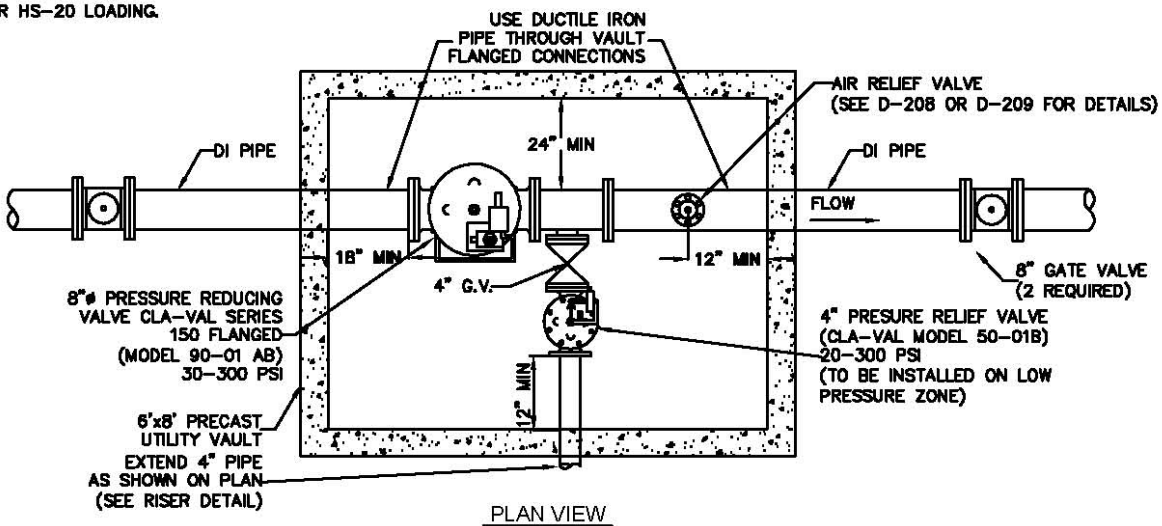

PLAN VIEW

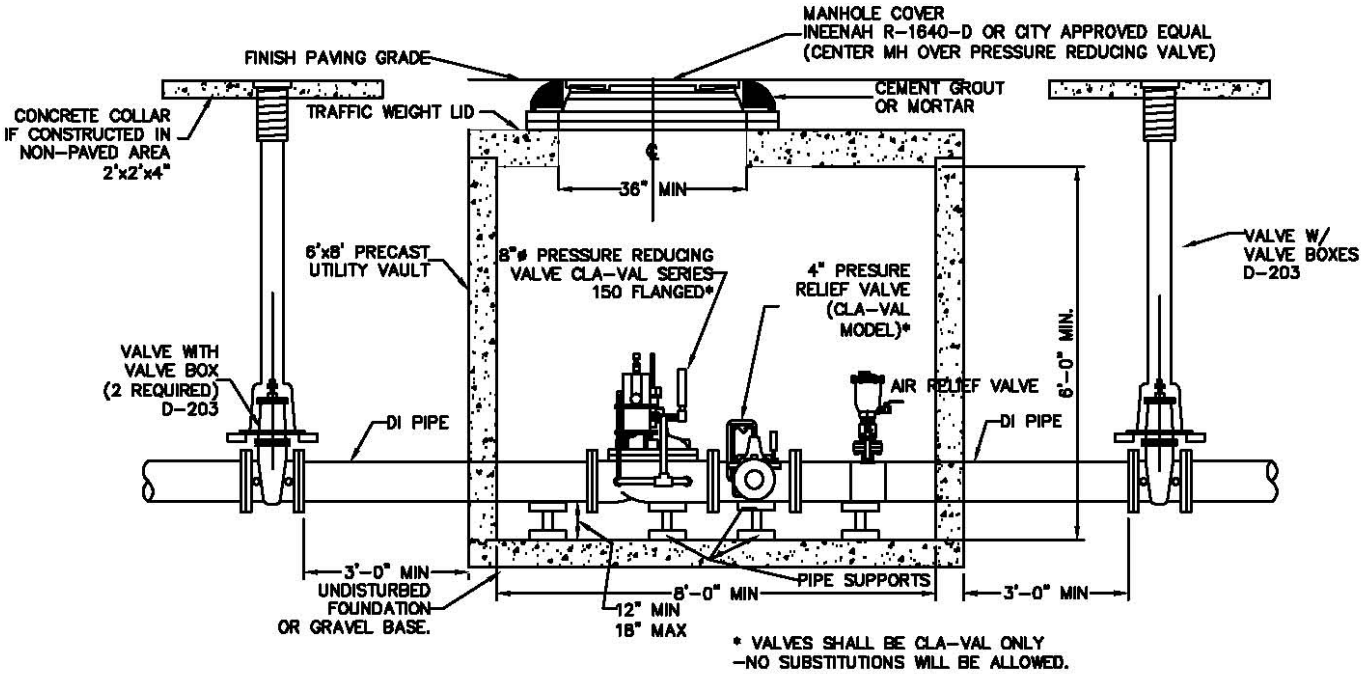

SECTION VIEW

CONSTRUCTION STANDARDS	PRESSURE REDUCER VALVE ASSEMBLY IN 6'x8' PRE-CAST VAULT STANDARD No. D-204 SHEET 2 OF 3	CITY OF AZTEC PUBLIC WORKS DEPARTMENT

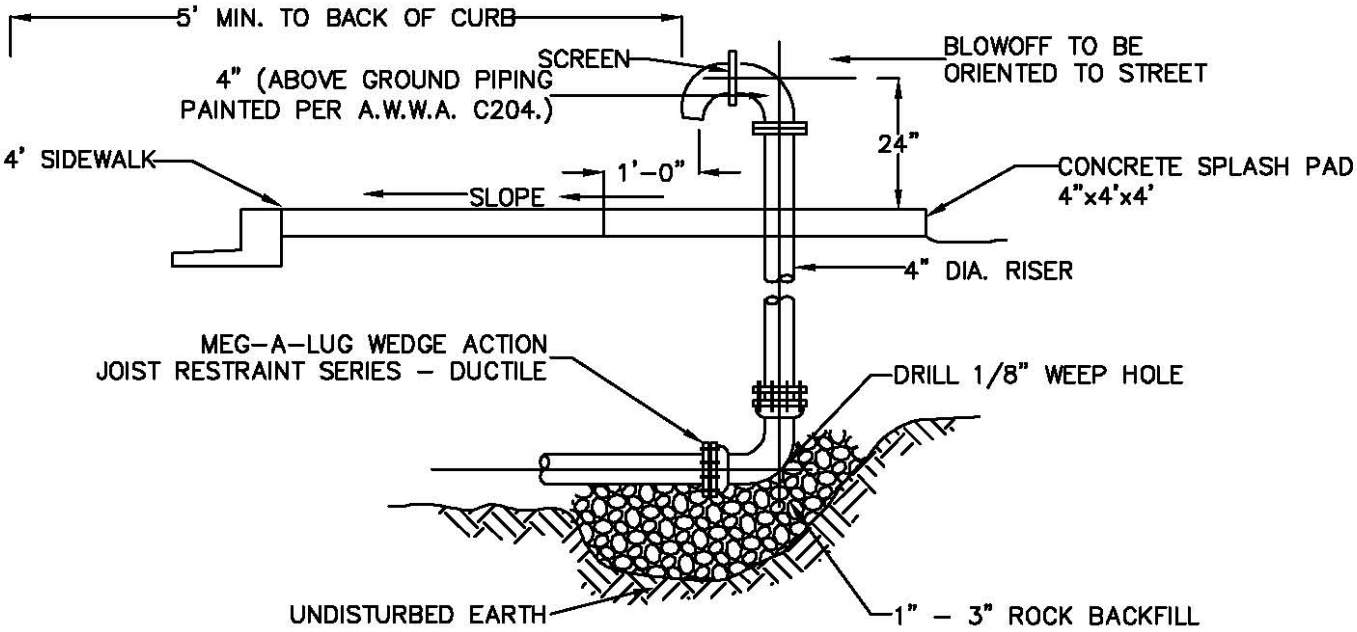

RISER DETAIL

1- RISER LOCATION
- TYPICAL - 1' BEHIND SIDEWALK
- MINIMUM 10' FROM VAULT

CONSTRUCTION STANDARDS	RISER DETAIL STANDARD No. D-204 SHEET 3 OF 3	CITY OF AZTEC PUBLIC WORKS DEPARTMENT

NOTE

MINIMUM DEPTH OF COVER OVER WATER LINE – 42"

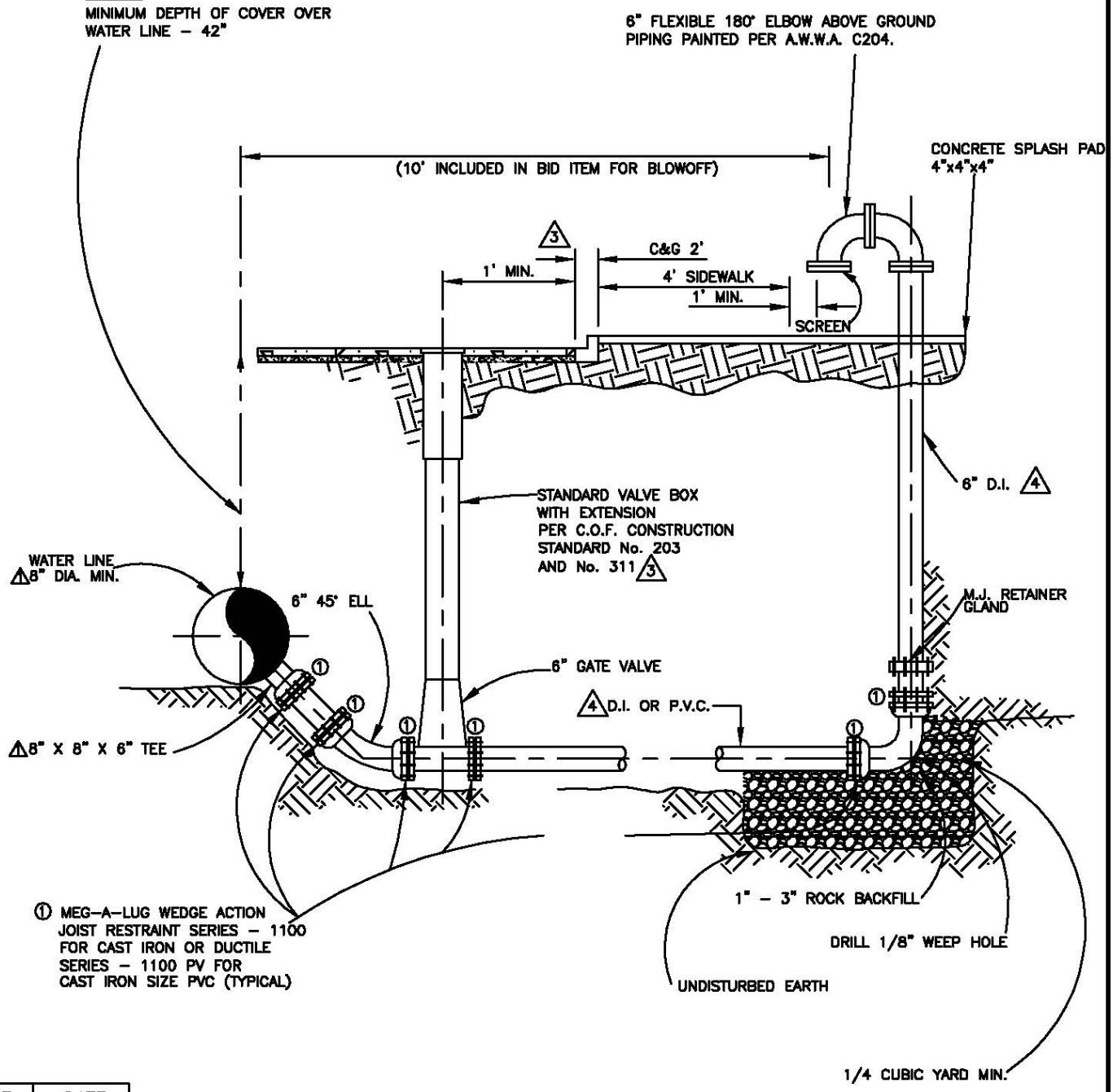

REV.	DATE
1	3/1/96
2	12/31/97
3	11/19/04
4	12/02/05

CONSTRUCTION STANDARDS	BLOW OFF VALVE ASSEMBLY DETAIL STANDARD No. D–206 SHEET 1 OF 1	CITY OF AZTEC PUBLIC WORKS DEPARTMENT

NOTE:

1) ORIENTATION OF NOZZLES AS SPECIFIED

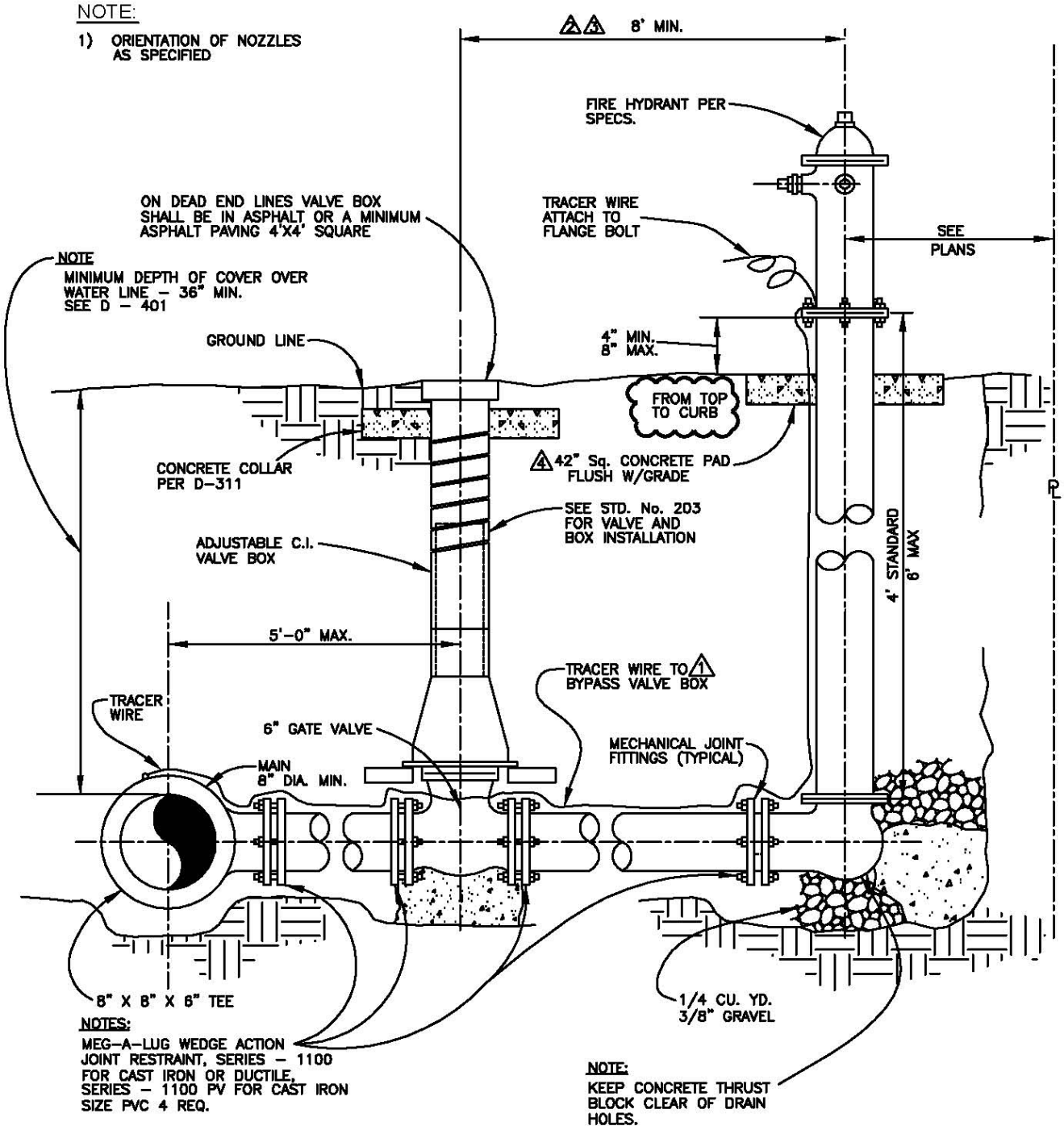

NOTES:

MEG-A-LUG WEDGE ACTION JOINT RESTRAINT, SERIES – 1100 FOR CAST IRON OR DUCTILE, SERIES – 1100 PV FOR CAST IRON SIZE PVC 4 REQ.

NOTE:

KEEP CONCRETE THRUST BLOCK CLEAR OF DRAIN HOLES.

REV.	DATE
1	01/02/01
2	12/9/02
3	12-13-02
4	01/07/04
5	11/19/04

CONSTRUCTION STANDARDS

FIRE HYDRANT

STANDARD No. D-207 SHEET 1 OF 3

CITY OF AZTEC

PUBLIC WORKS DEPARTMENT

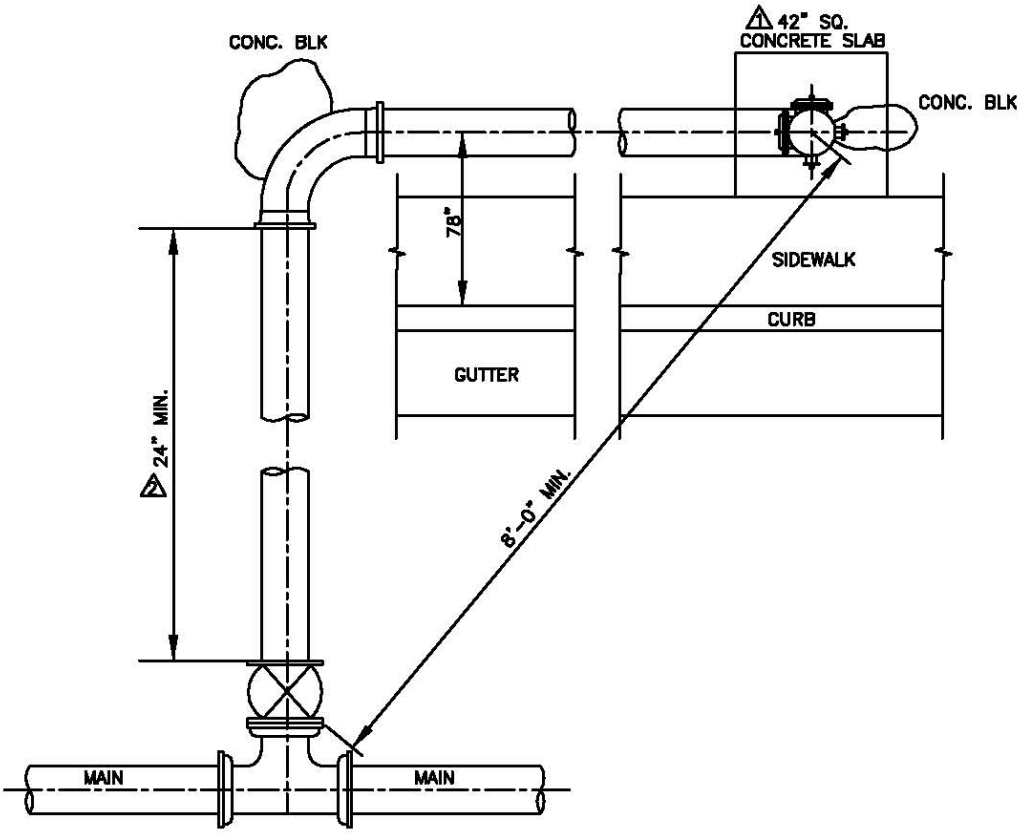

NOTE:

1.) MINIMUM DIRECT DISTANCE FIRE HYDRANT TO GATE VALVE SHALL BE 8'-0".

2.) ALL JOINTS SHALL BE MEGA-LUGS.

3.) LUBRICATE HYDRANT NOZZLE THREADS WITH NON-TOXIC GREASE.

4.) FIRE HYDRANTS JOINTS NOT FLANGED REQUIRE MEGALUGED, OR APPROVED EQUAL.

REV.	DATE
1	01/07/04
2	12/02/05

CONSTRUCTION STANDARDS

FIRE HYDRANT OFFSET ALTERNATE

STANDARD No. D-207 SHEET 2 OF 3

CITY OF AZTEC

PUBLIC WORKS DEPARTMENT

TOP VIEW

STREET/BUILDING SIDE
MUST REMAIN OPEN AND CLEAR

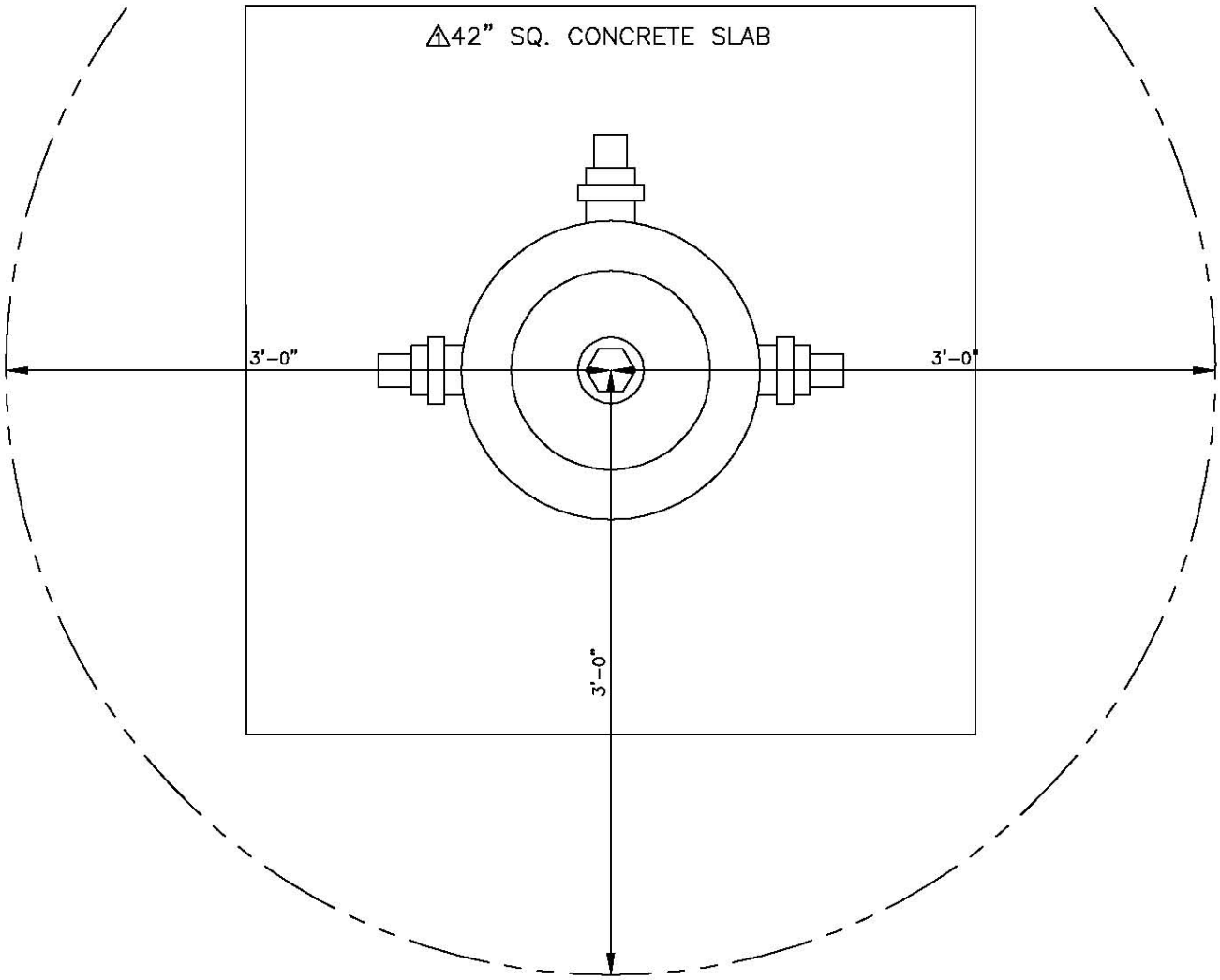

REV.	DATE
△1	01/07/04

CONSTRUCTION STANDARDS

FIRE HYDRANT (TOP VIEW)

STANDARD No. D-207 SHEET 3 OF 3

CITY OF AZTEC

PUBLIC WORKS DEPARTMENT

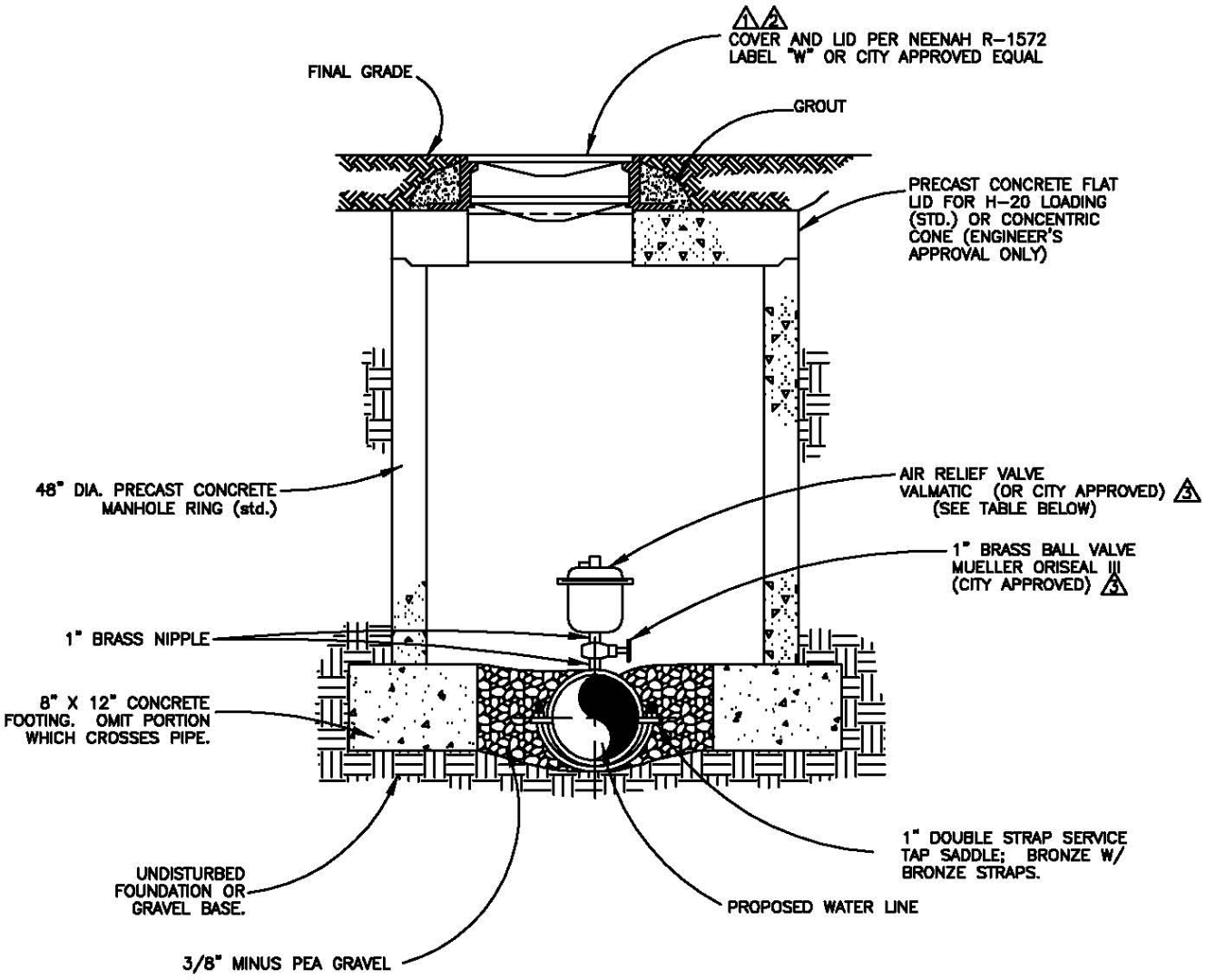

AIR RELIEF VALVE DATA

WATERLINE DIAMETER	INLET SIZE N.P.T.	OUTLET SIZE N.P.T.	ORIFICE SIZE	VALMATIC MODEL NO.
6" OR UNDER	1"	3/8"	1/16"	15
8"	1"	1/2"	3/32"	22
10"	1"	1/2"	3/32"	22
12"	1"	1/2"	1/8"	25

REV.	DATE
1	1/20/99
2	1/20/99
3	12/02/2005

CONSTRUCTION STANDARDS

AIR RELIEF VALVE ASSEMBLY

6" THRU 12" PIPE

STANDARD No. D-208 SHEET 1 OF 1

CITY OF AZTEC

PUBLIC WORKS DEPARTMENT

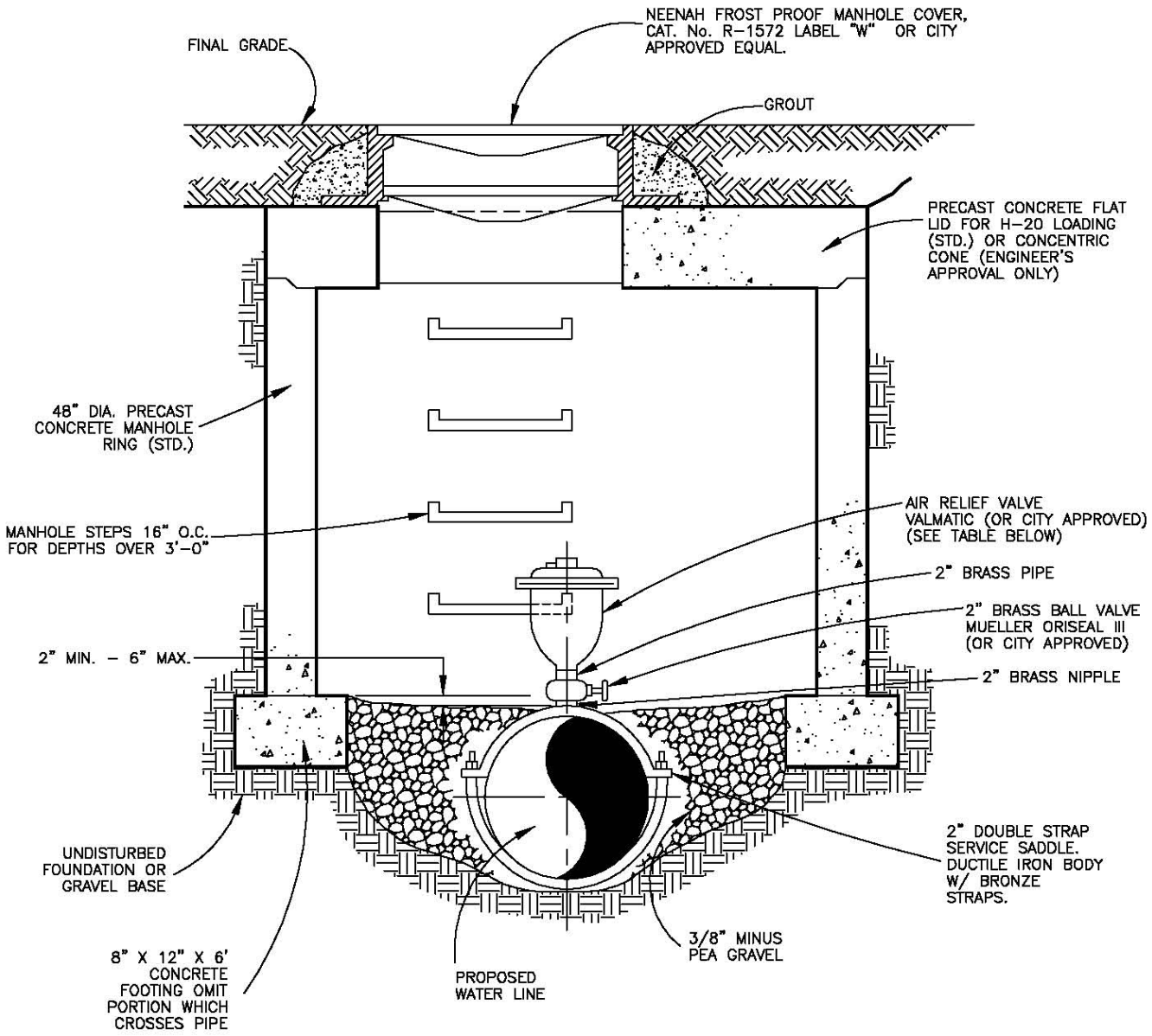

AIR RELIEF VALVE DATA

WATERLINE DIAMETER	INLET SIZE N.P.T.	OUTLET SIZE N.P.T.	ORIFICE SIZE	VALMATIC MODEL NO.
16"	2"	1/2"	3/16"	38
24"	2"	1/2"	3/16"	38
OVER 24"	AS DIRECTED BY ENGINEER.			

REV.	DATE
1	10/5/81
2	11/3/81
3	11/16/83
4	12/02/05

CONSTRUCTION STANDARDS

AIR RELIEF VALVE ASSEMBLY

16" PIPE OR LARGER

STANDARD No. D-209 SHEET 1 OF 1

CITY OF AZTEC

PUBLIC WORKS DEPARTMENT

MEG-A-LUGS ARE REQUIRED UNLESS APPROVED BY CITY

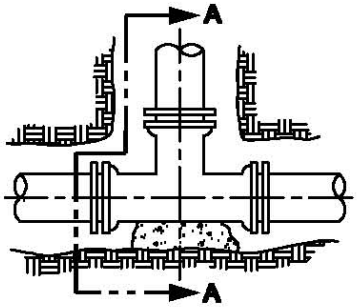

TEE

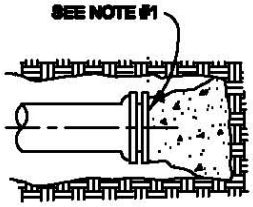

DEAD END

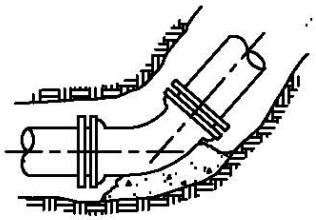

BEND HORIZONTAL OR BOTTOM OF VERTICAL

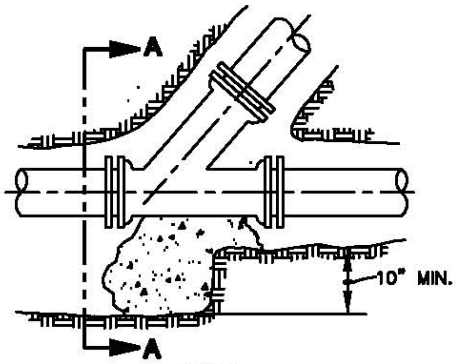

WYE

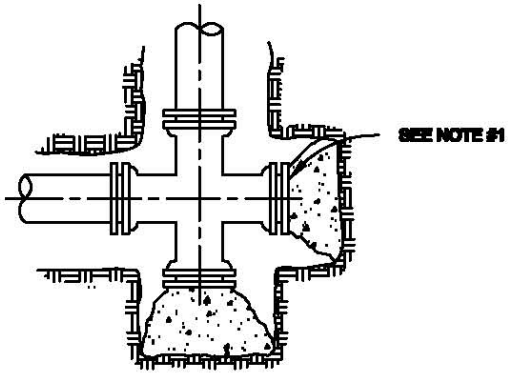

CROSS W/ DEAD END BRANCH

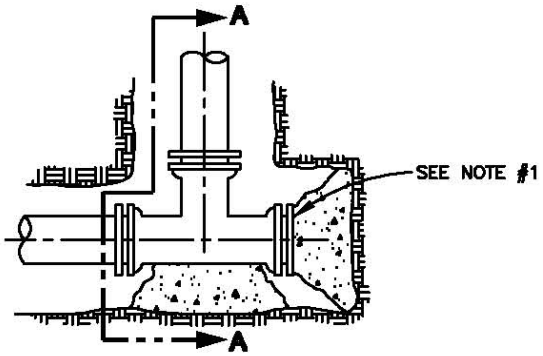

TEE W/ DEAD END BRANCH

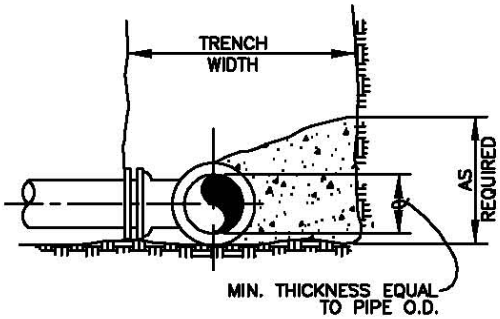

SECTION A-A

NOTES

1. AT DEAD ENDS, WRAP FITTINGS WITH TAR PAPER, FELT, PLASTIC ETC. TO PROVIDE BOND BREAK BETWEEN CONCRETE AND FITTINGS.
2. ALL THRUST BLOCKING SHALL BE CAST–IN–PLACE CONCRETE HAVING A MINIMUM YIELD STRENGTH OF 2000 P.S.I.
3. THRUST BLOCKING SHALL BE CAST AGAINST UNDISTURBED EARTH. FORMS SHALL BE USED AS REQUIRED TO OBTAIN ADEQUATE BEARING AREA AND TO CONFINE THE CONCRETE THRUST BLOCKING SHALL BEAR ON THE FITTING OR END CAP ONLY AND SHOULD NOT BE ALLOWED TO SPILL OVER THE JOINT OR AGAINST THE PIPE.

CONSTRUCTION STANDARDS	**THRUST BLOCKS** STANDARD No. D–210 SHEET 1 OF 2	CITY OF AZTEC PUBLIC WORKS DEPARTMENT

MEG-A-LUGS ARE REQUIRED UNLESS APPROVED BY CITY

TABLE OF BEARING AREAS IN SQ. FT FOR CONCRETE THRUST BLOCKING

FOR 150 P.S.I. INTERNAL STATIC PRESSURE AND 2000 LBS. PER SQ. FT SOIL BEARING CAPACITY.

PIPE SIZE	BENDS				TEES	PLUGS
	90°	45°	22 1/2°	11 1/4°		
4	1.50	0.75	0.50	0.0	1.00	1.00
6	3.00	1.75	1.00	0.0	2.25	2.25
8	5.50	3.00	1.50	1.00	3.75	3.75
10	8.50	4.50	2.50	1.50	6.00	6.00
12	12.00	6.50	3.50	1.75	8.50	8.50
14	16.50	9.00	4.50	2.25	11.50	11.50
16	21.50	11.50	6.00	3.00	15.00	15.00
18	27.00	14.75	7.50	3.75	19.00	19.00
20	33.50	18.00	9.25	4.75	23.50	23.50
24	48.00	26.00	13.25	6.75	34.00	34.00
30	75.25	40.75	20.75	10.50	53.00	53.00
36	108.25	58.50	30.00	15.00	76.50	76.50

AREAS GIVEN IN TABLE ARE BASED UPON AN INTERNAL STATIC PRESSURE OF 150 P.S.I. AND A SOIL BEARING CAPACITY OF 2000 LBS. PER SQ. FT. BEARING AREAS FOR ANY PRESSURE AND SOIL BEARING CAPACITY MAY BE OBTAINED BY MULTIPLYING THE TABULATED VALUES BY A CORRECTION FACTOR "F".

$$F = \frac{\text{ACTUAL SPECIFIED TEST PRESSURE IN HUNDREDS OF LBS.}}{\text{ACTUAL SOIL BEARING CAPACITY IN THOUSANDS OF LBS.}}$$

EXAMPLE: TO FIND BEARING AREA FOR 8" – 90° BEND WITH A STATIC INTERNAL PRESSURE OF 100 P.S.I. AND WITH A SOIL BEARING CAPACITY OF 3000 LBS. PER SQ. FT.

F= 1÷3 = .33 TABULATED VALUE = 550 SQ. FT.
0.33 X 550 = 1.82 SAY 2 SQ. FT. OR 2 FT. LONG BY 1 FT. HIGH

CONSTRUCTION STANDARDS	THRUST BLOCKS STANDARD No. D–210 SHEET 2 OF 2	CITY OF AZTEC PUBLIC WORKS DEPARTMENT

FIBERGLASS POST DETAIL

CARSONITE CUM-375
OR APPROVED EQUAL

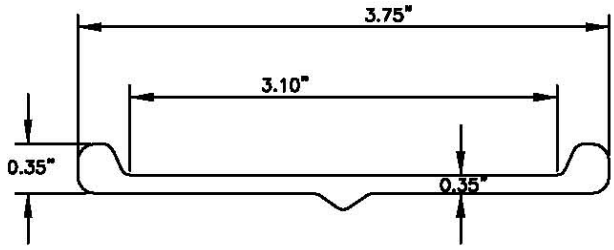

SECTION VIEW

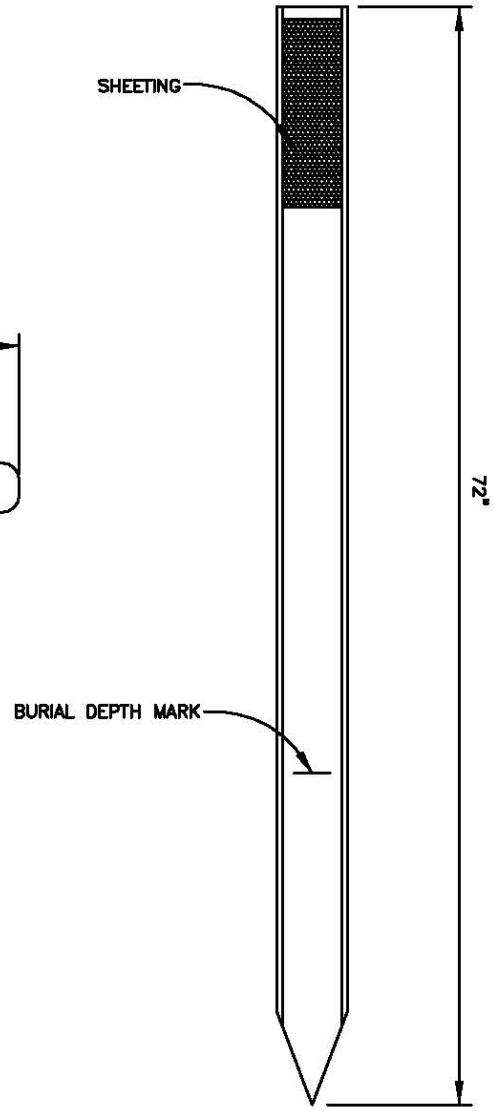

FRONT VIEW

NOTE

TEXT
PER CITY ENGINEER
OR HIS DISIGNEE

REV.	DATE
1	12/31/97

CONSTRUCTION STANDARDS

STATIONARY WATER LINE LOCATION MARKER

STANDARD No. D-212 SHEET 1 OF 1

CITY OF AZTEC

PUBLIC WORKS DEPARTMENT

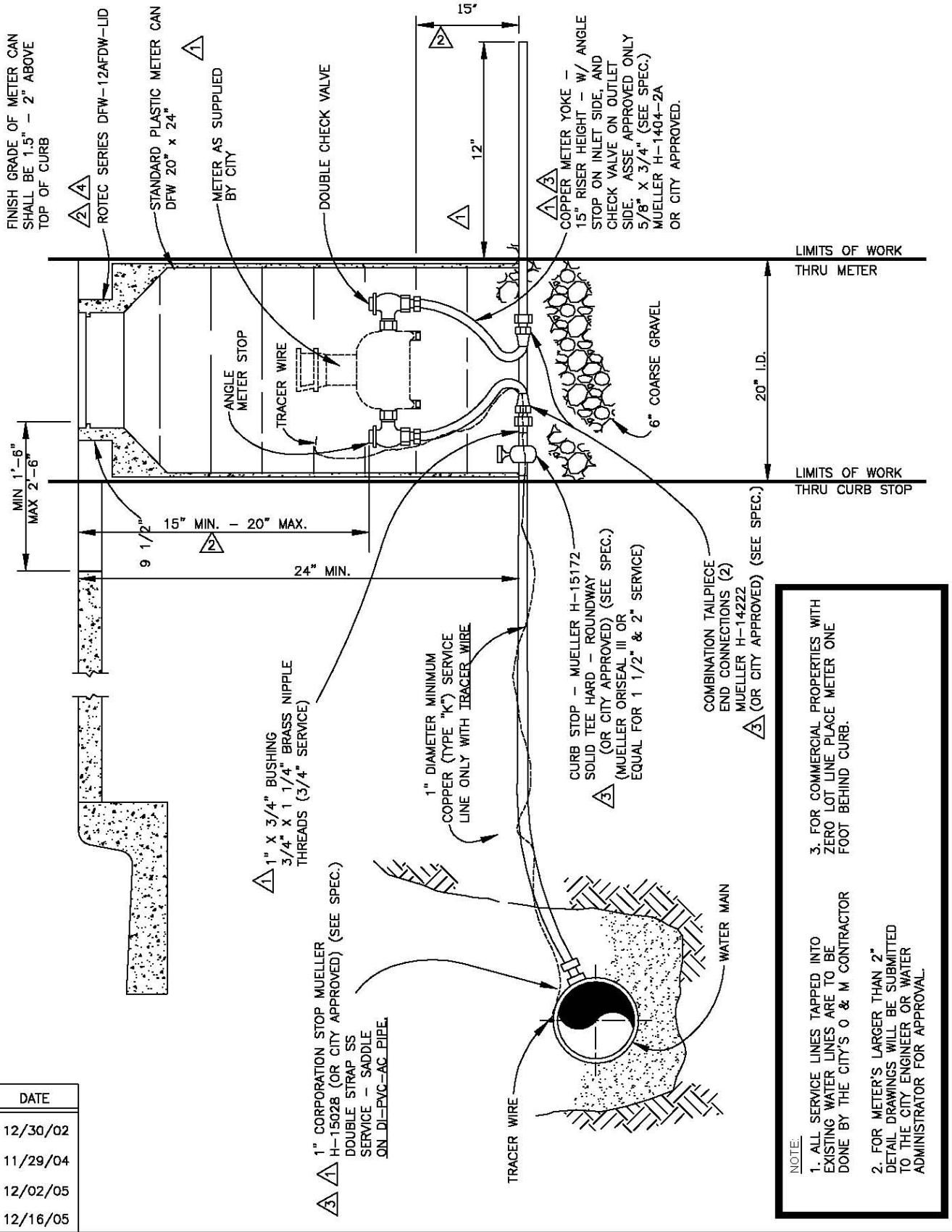

NOTE:

1. ALL SERVICE LINES TAPPED INTO EXISTING WATER LINES ARE TO BE DONE BY THE CITY'S O & M CONTRACTOR
2. FOR METER'S LARGER THAN 2" DETAIL DRAWINGS WILL BE SUBMITTED TO THE CITY ENGINEER OR WATER ADMINISTRATOR FOR APPROVAL.
3. FOR COMMERCIAL PROPERTIES WITH ZERO LOT LINE PLACE METER ONE FOOT BEHIND CURB.

REV.	DATE
1	12/30/02
2	11/29/04
3	12/02/05
4	12/16/05

CONSTRUCTION STANDARDS

WATER SERVICE CONNECTION 5/8" METER

STANDARD No. D-220 SHEET 1 OF 1

CITY OF AZTEC

PUBLIC WORKS DEPARTMENT

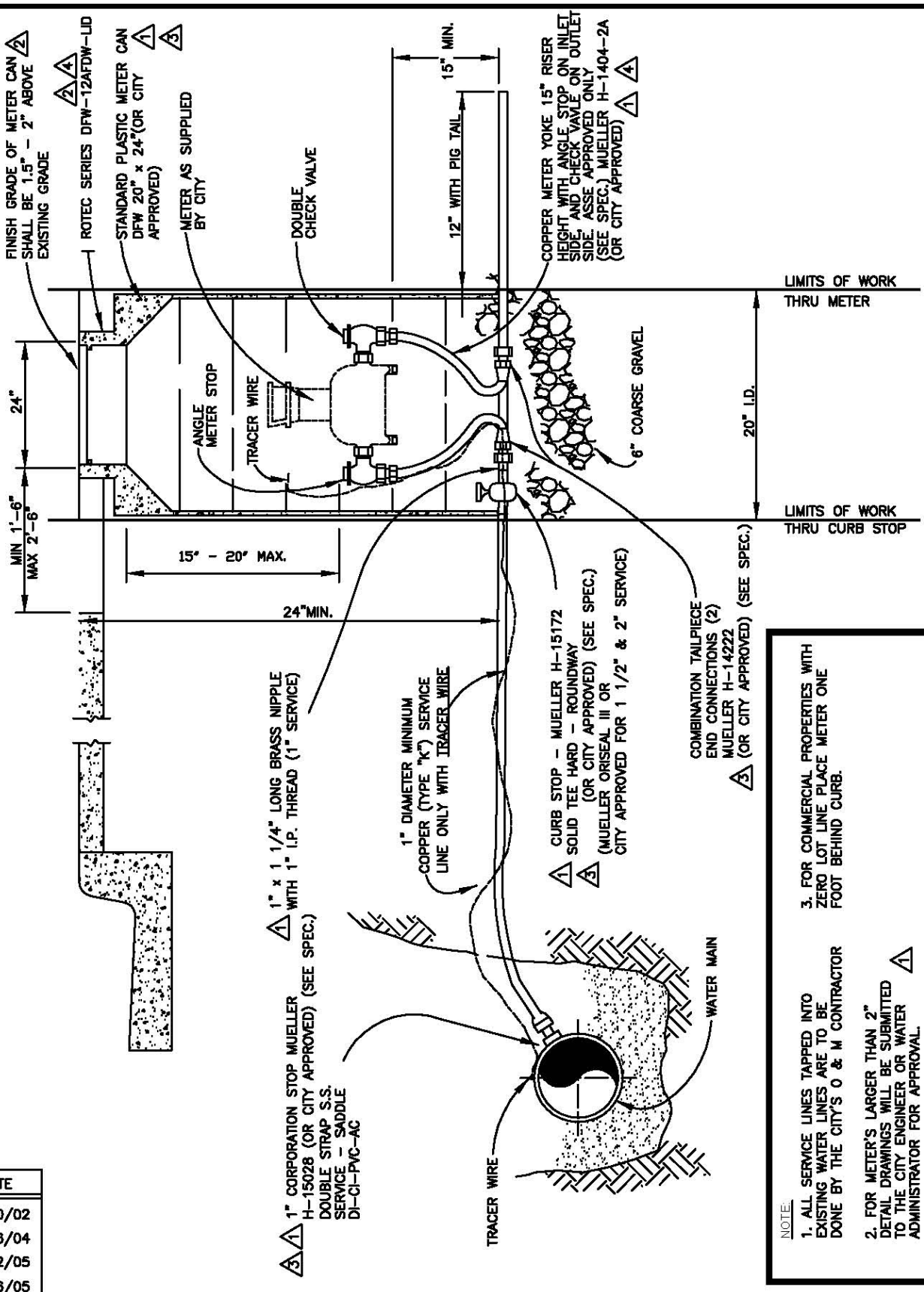

NOTE

1. ALL SERVICE LINES TAPPED INTO EXISTING WATER LINES ARE TO BE DONE BY THE CITY'S O & M CONTRACTOR
2. FOR METER'S LARGER THAN 2" DETAIL DRAWINGS WILL BE SUBMITTED TO THE CITY ENGINEER OR WATER ADMINISTRATOR FOR APPROVAL.
3. FOR COMMERCIAL PROPERTIES WITH ZERO LOT LINE PLACE METER ONE FOOT BEHIND CURB.

REV.	DATE
1	12/30/02
2	12/16/04
3	12/02/05
4	12/16/05

CONSTRUCTION STANDARDS

WATER SERVICE CONNECTION 1" METER

STANDARD No. D-221 SHEET 1 OF 1

CITY OF AZTEC

PUBLIC WORKS DEPARTMENT

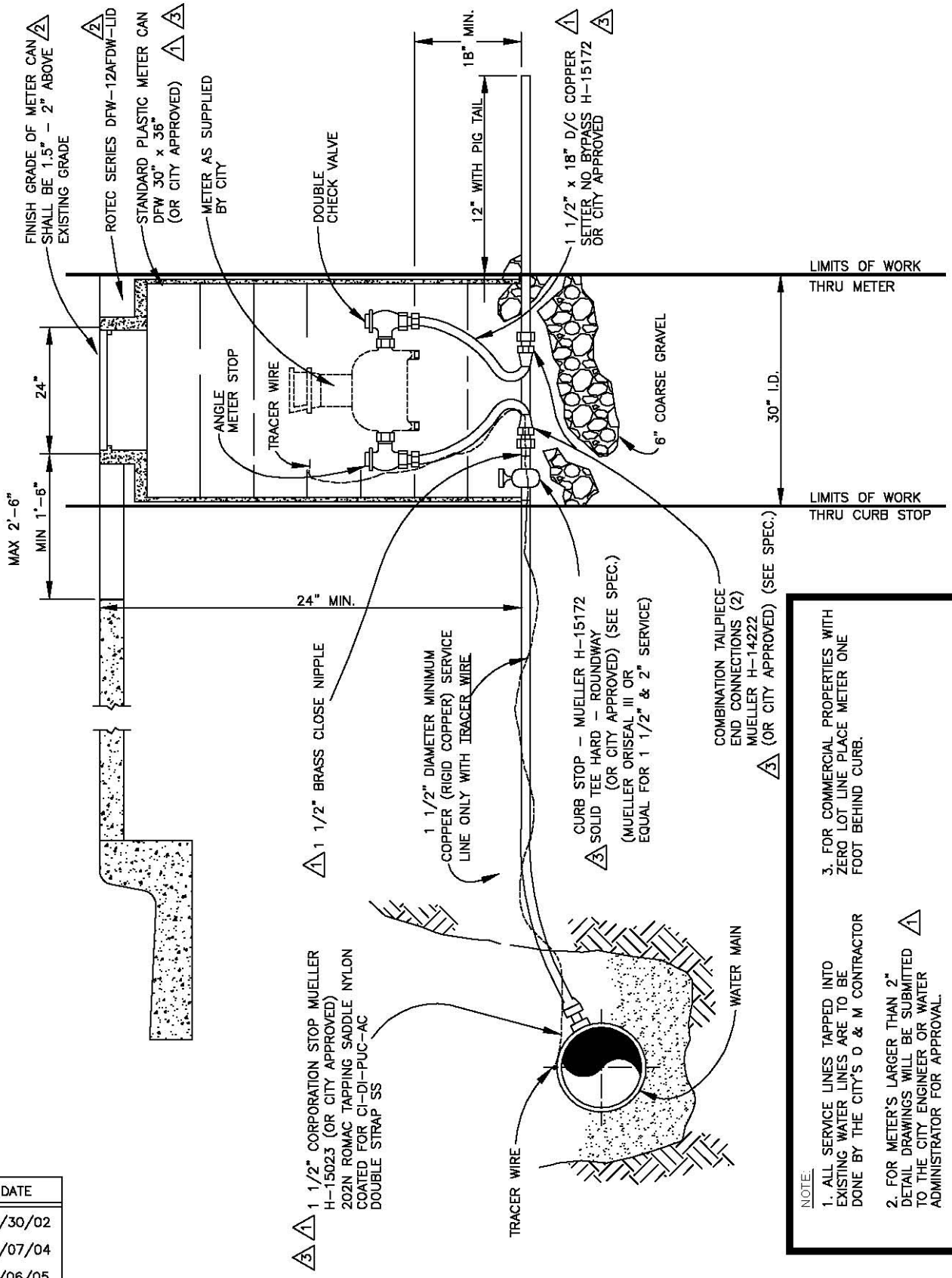

REV.	DATE
1	12/30/02
2	01/07/04
3	12/06/05

CONSTRUCTION STANDARDS

WATER SERVICE CONNECTION 1 1/2" METER

STANDARD No. D-222 SHEET 1 OF 1

CITY OF AZTEC

PUBLIC WORKS DEPARTMENT

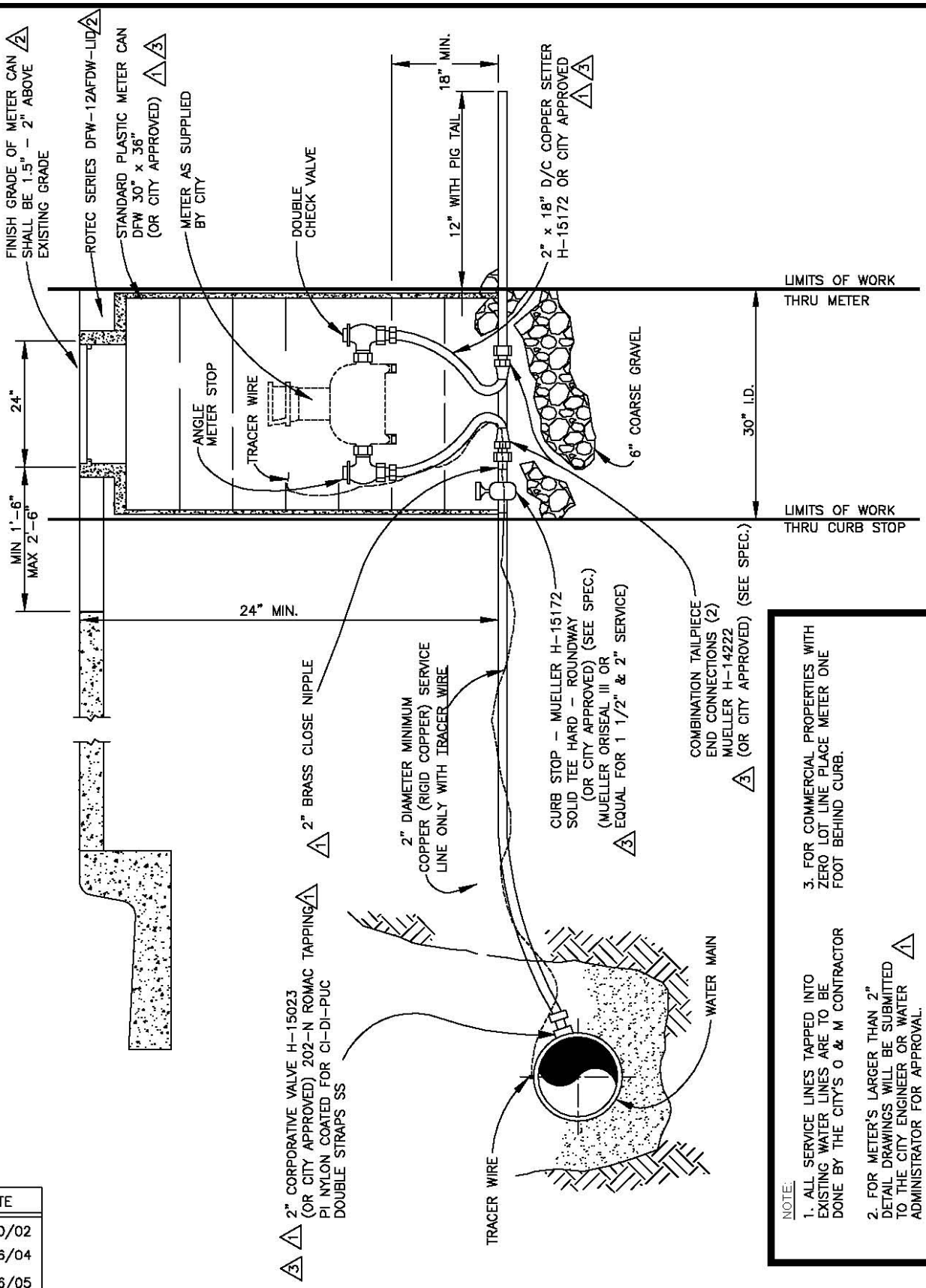

NOTE:

1. ALL SERVICE LINES TAPPED INTO EXISTING WATER LINES ARE TO BE DONE BY THE CITY'S O & M CONTRACTOR
2. FOR METER'S LARGER THAN 2" DETAIL DRAWINGS WILL BE SUBMITTED TO THE CITY ENGINEER OR WATER ADMINISTRATOR FOR APPROVAL.
3. FOR COMMERCIAL PROPERTIES WITH ZERO LOT LINE PLACE METER ONE FOOT BEHIND CURB.

REV.	DATE
1	12/30/02
2	12/16/04
3	12/06/05

CONSTRUCTION STANDARDS

WATER SERVICE CONNECTION 2" METER

STANDARD No. D-223 SHEET 1 OF 1

CITY OF AZTEC

PUBLIC WORKS DEPARTMENT

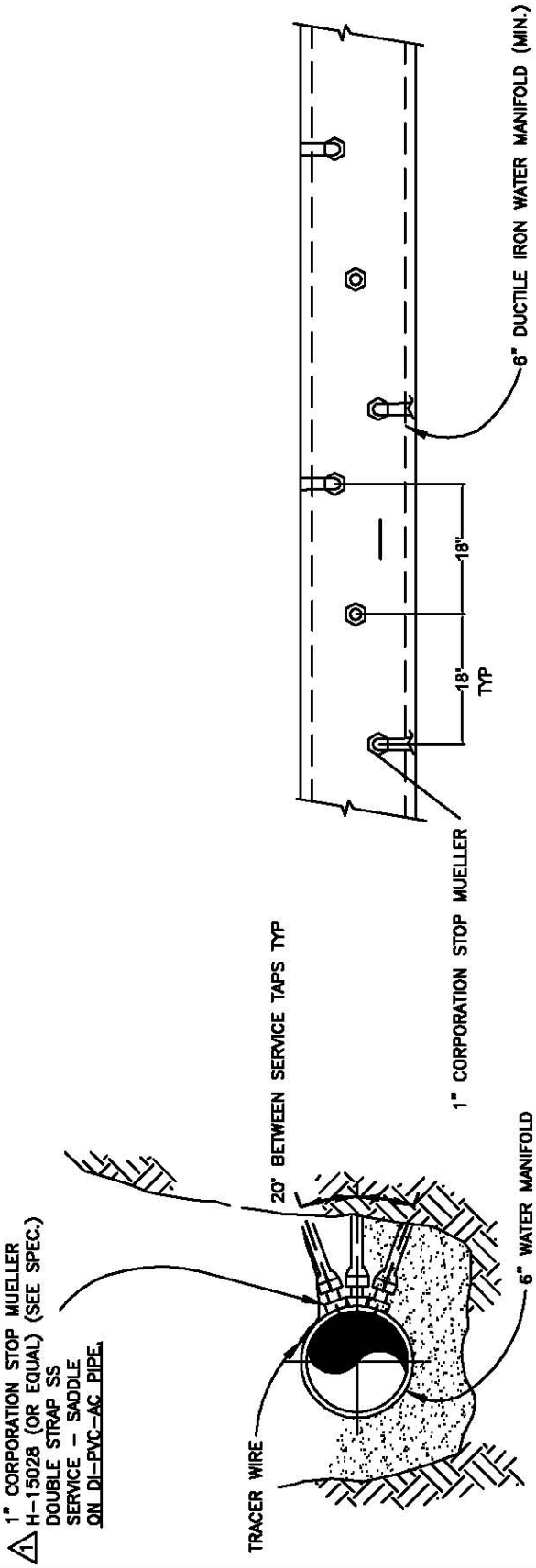

WATER SERVICE MANIFOLD DETAIL

CONSTRUCTION STANDARDS	WATER SERVICE MANIFOLD DETAIL STANDARD No. D-224 SHEET 1 OF 1	CITY OF AZTEC PUBLIC WORKS DEPARTMENT