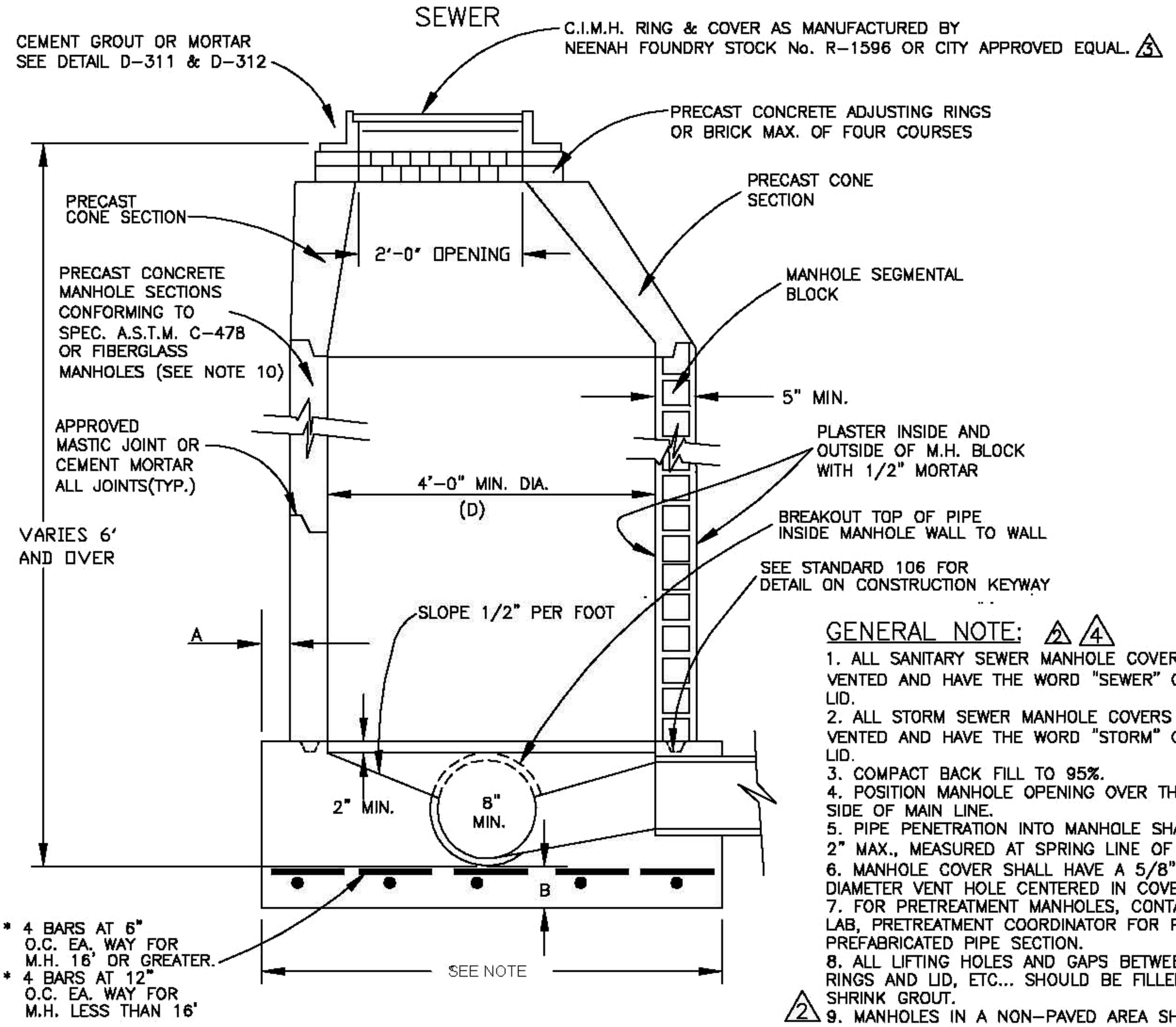

GENERAL NOTE: 2 4

1. ALL SANITARY SEWER MANHOLE COVERS SHALL BE VENTED AND HAVE THE WORD "SEWER" CAST INTO THE LID.
2. ALL STORM SEWER MANHOLE COVERS SHALL BE VENTED AND HAVE THE WORD "STORM" CAST INTO THE LID.
3. COMPACT BACK FILL TO 95%.
4. POSITION MANHOLE OPENING OVER THE UPSTREAM SIDE OF MAIN LINE.
5. PIPE PENETRATION INTO MANHOLE SHALL BE FLUSH TO 2" MAX., MEASURED AT SPRING LINE OF PIPE.
6. MANHOLE COVER SHALL HAVE A 5/8" MIN. TO 1" MAX. DIAMETER VENT HOLE CENTERED IN COVER.
7. FOR PRETREATMENT MANHOLES, CONTACT THE CITY LAB, PRETREATMENT COORDINATOR FOR PURCHASE OF PREFABRICATED PIPE SECTION.
8. ALL LIFTING HOLES AND GAPS BETWEEN MANHOLE RINGS AND LID, ETC... SHOULD BE FILLED WITH NON SHRINK GROUT.
9. (2) MANHOLES IN A NON-PAVED AREA SHALL HAVE A MIN. 48" SQUARE CONCRETE APRON OR BE RAISED A MIN. 6" OR AS DIRECTED BY THE CITY ENGINEER.
10. (4) FIBERGLASS MANHOLES SHALL BE MANUFACTURED FROM COMMERCIAL GRADE POLYESTER RESIN OR OTHER SUITABLE POLYESTER OR VINYL ESTER RESINS WITH FIBERGLASS REINFORCEMENTS. MANHOLE SHALL BE A ONE PIECE UNIT MANUFACTURED TO MEET OR EXCEED ALL SPECIFICATIONS OF A.S.T.M. D-3753 LATEST EDITION. FIBERGLASS MANHOLE MANUFACTURER SHALL DEMONSTRATE CONTINUED EXPERIENCE AS A MANUFACTURER OF FIBERGLASS WASTEWATER PRODUCTS FOR A PERIOD OF NOT LESS THAN FIVE YEARS. IN ADDITION, ALL APPROVED MANHOLE MANUFACTURERS SHALL BE ISO9001 REGISTERED.

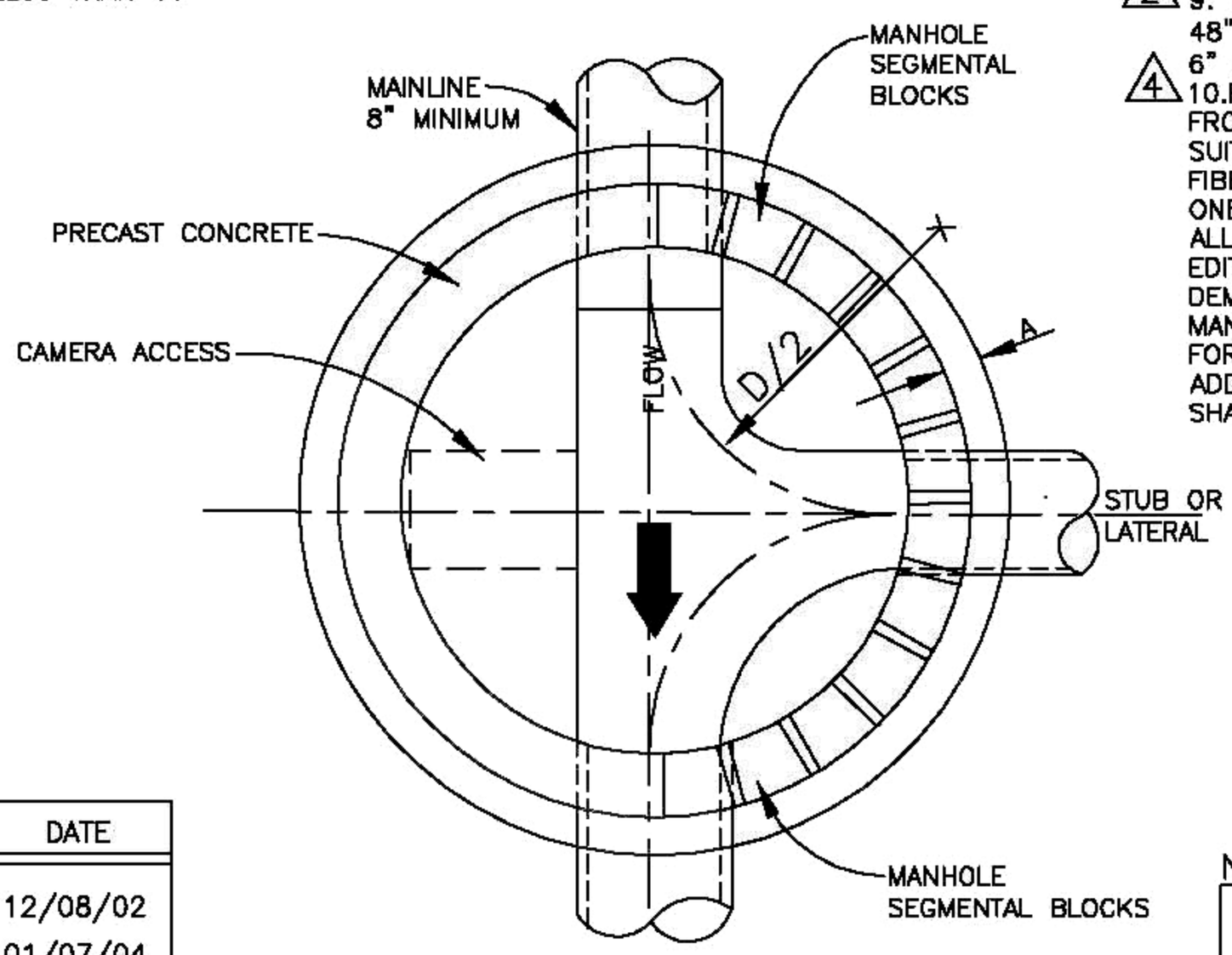

MANHOLE DEPTH	DIMENSION A	DIMENSION B
6'-0" TO 15'-0"	3"	6"
OVER 15'-0"	6"	10"

NOTE:

MAINLINE SIZE	MANHOLE DIMENSION
8" TO 24"	4'-0"

REV.	DATE
1	12/08/02
2	01/07/04
3	12/01/05
4	01/31/06

CONSTRUCTION STANDARDS

STANDARD MANHOLE TYPE "E"

STANDARD NO. D-104 SHEET 1 OF 1

CITY OF AZTEC

PUBLIC WORKS DEPARTMENT