NOTE: PRECAST MANHOLE SHALL BE DESIGNED FOR HS-20 LOADING

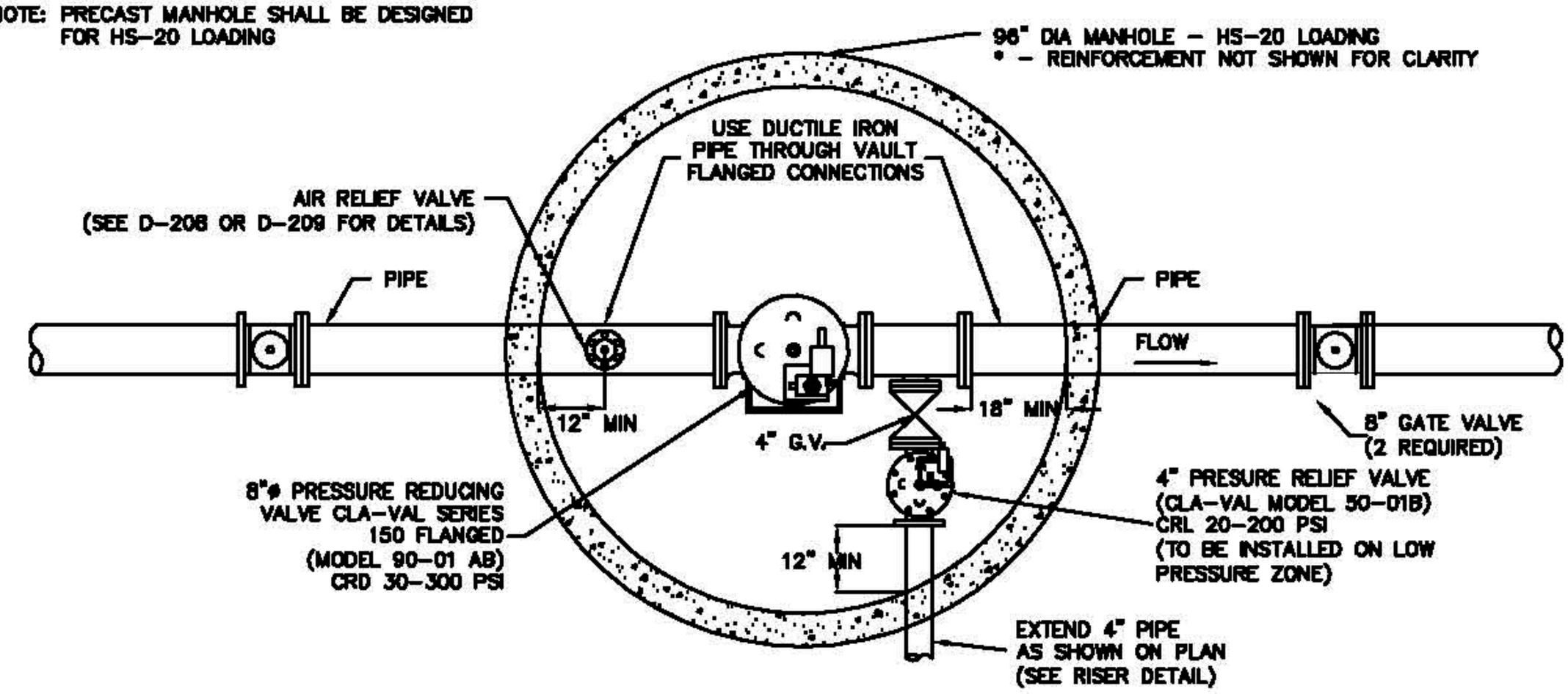


PLAN VIEW

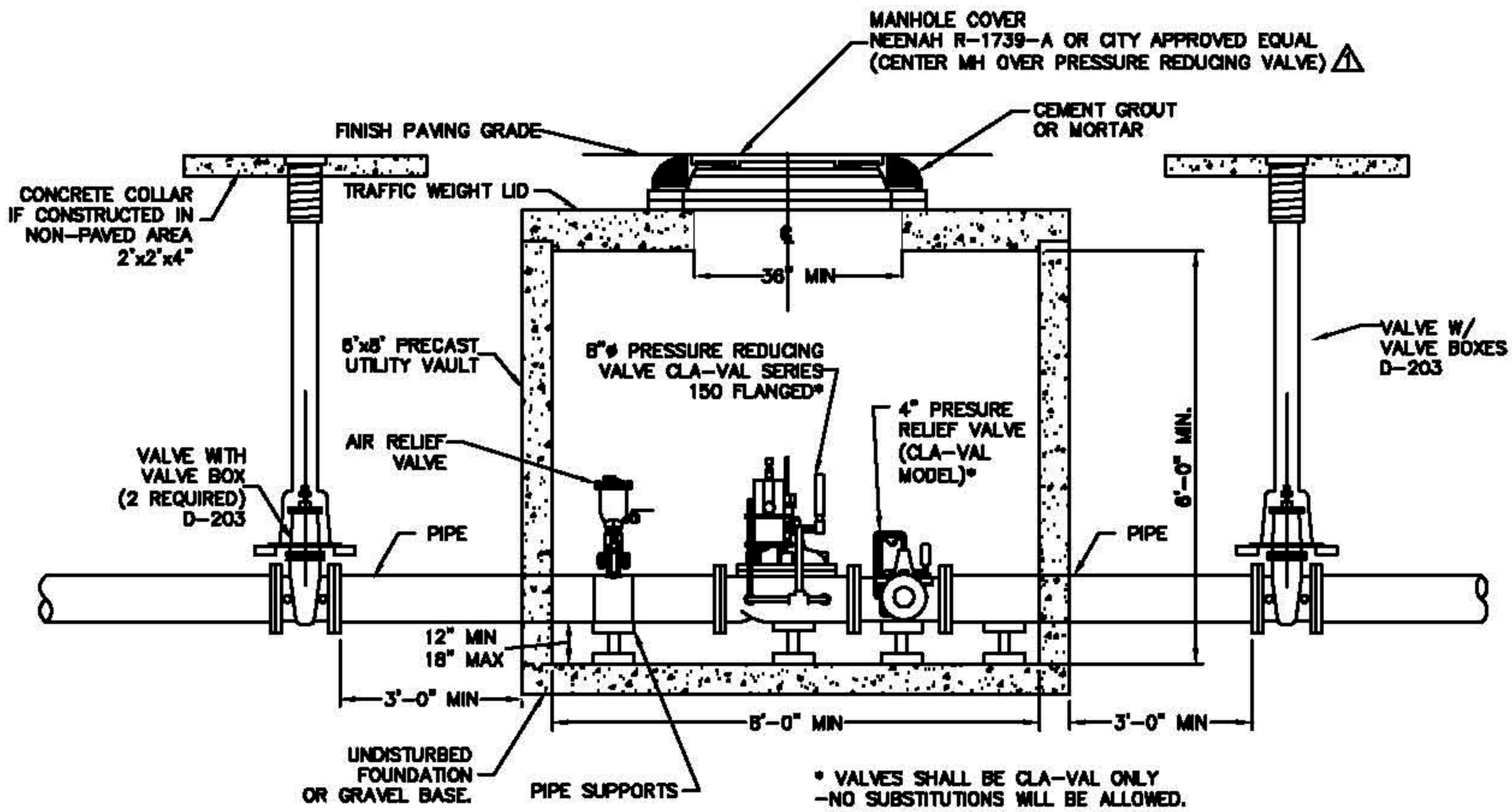


SECTION VIEW

| REV. | DATE |
|---|---|
| △1 | 12/09/05 |

NOT TO SCALE

CONSTRUCTION STANDARDS

# PRESSURE REDUCER VALVE ASSEMBLY 8' DIA PRE-CAST MANHOLE

STANDARD No. D-204 SHEET 1 OF 3

CITY OF AZTEC

PUBLIC WORKS DEPARTMENT

NOTES
PRECAST VAULT SHALL BE DESIGNED FOR HS-20 LOADING.

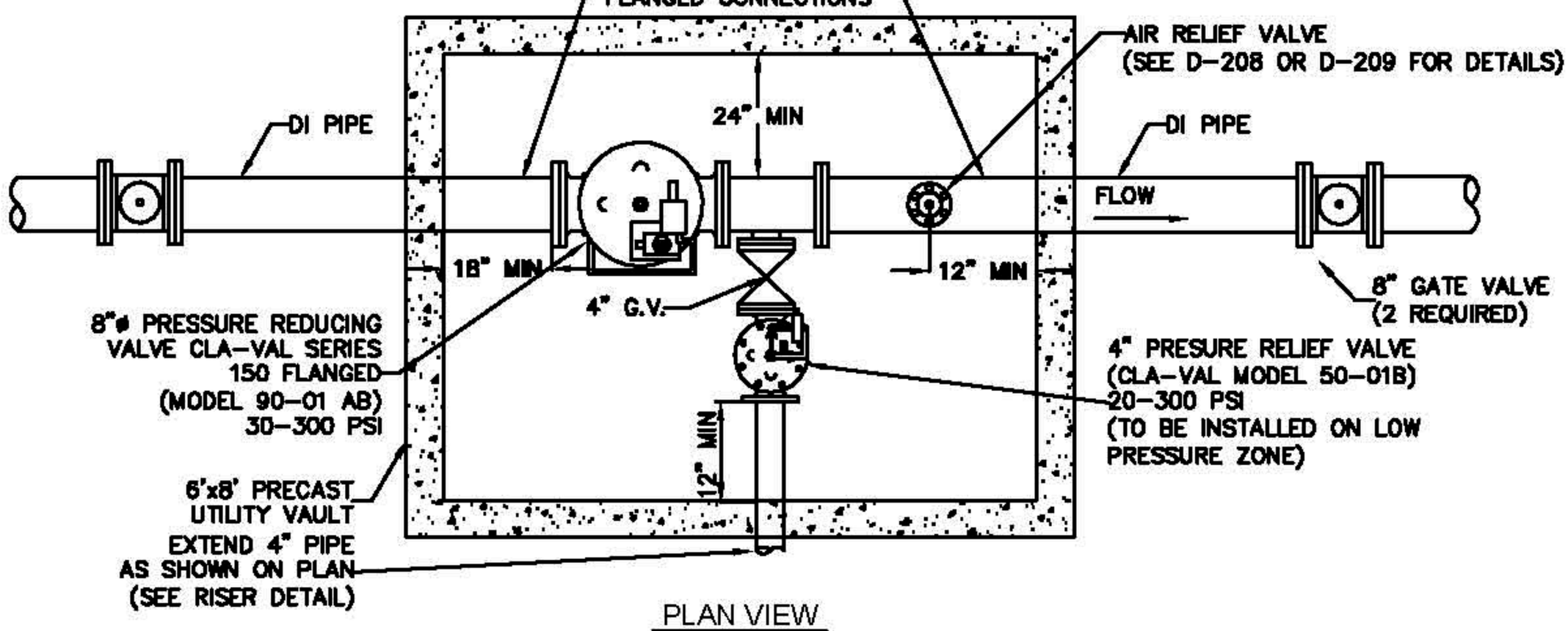


PLAN VIEW

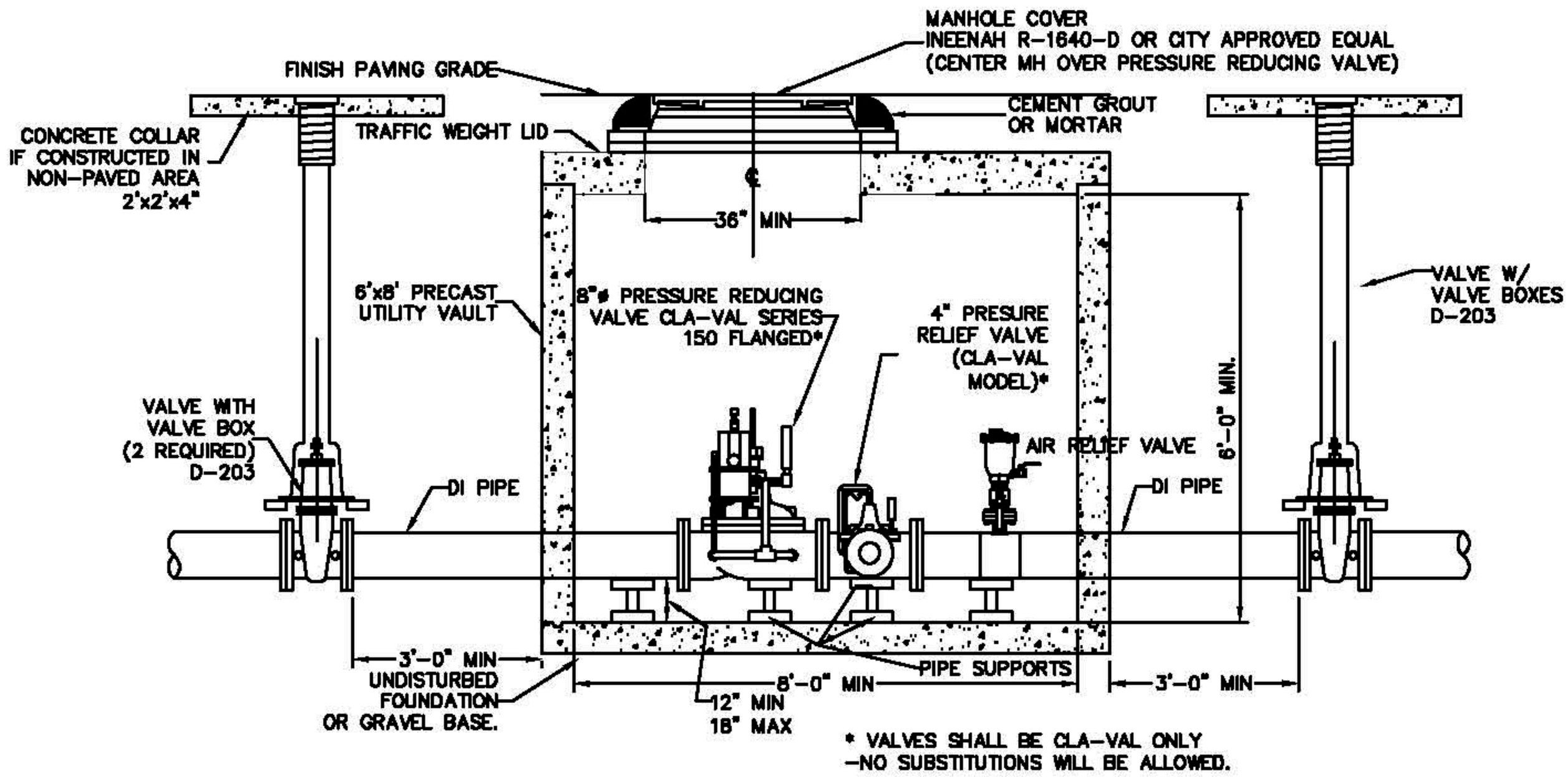


SECTION VIEW

| CONSTRUCTION STANDARDS | PRESSURE REDUCER VALVE ASSEMBLY IN 6'x8' PRE-CAST VAULT<br>STANDARD No. D-204 SHEET 2 OF 3 | CITY OF AZTEC<br>PUBLIC WORKS DEPARTMENT |
|---|---|---|

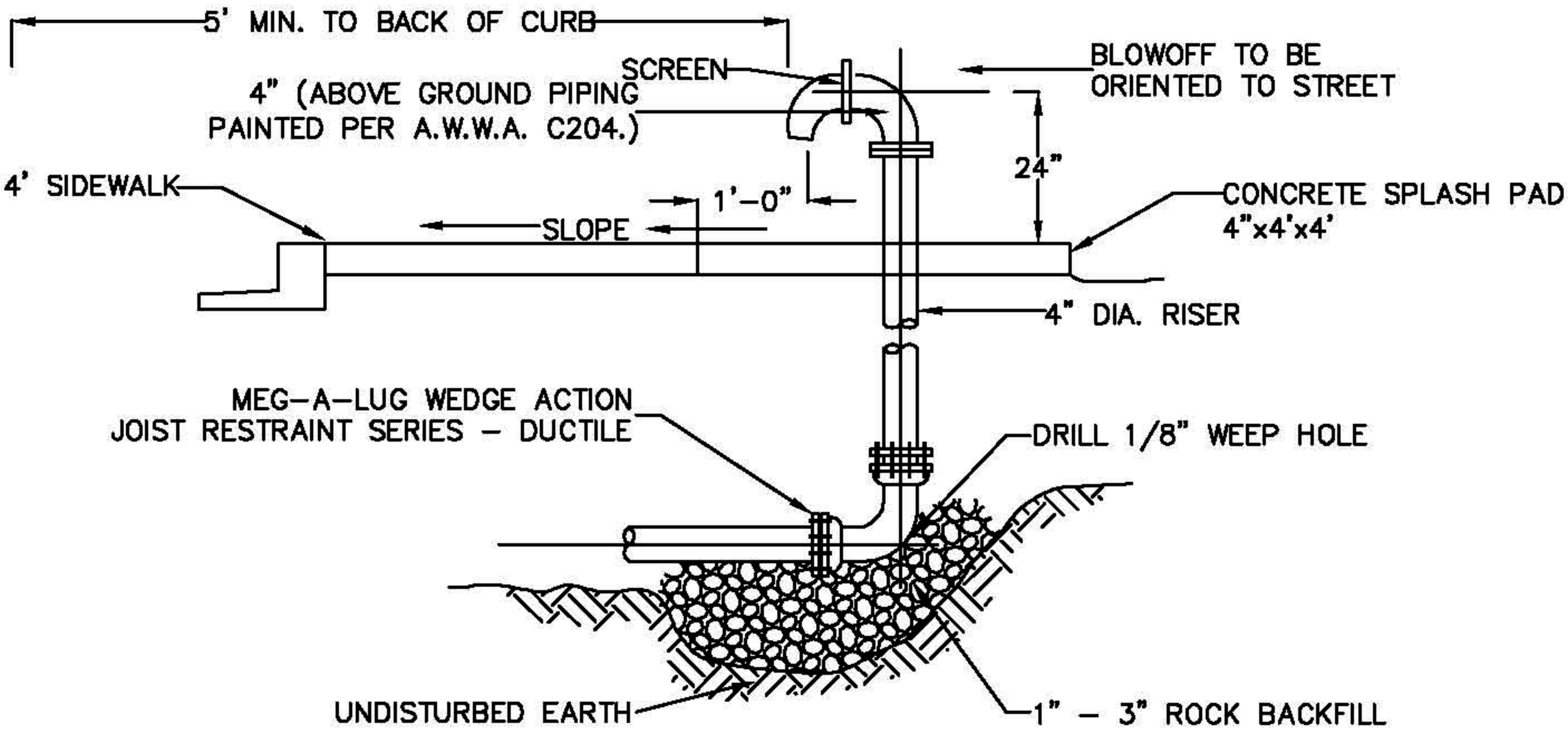


## RISER DETAIL

1- RISER LOCATION
- TYPICAL - 1' BEHIND SIDEWALK
- MINIMUM 10' FROM VAULT

| CONSTRUCTION STANDARDS | RISER DETAIL<br>STANDARD No. D-204 SHEET 3 OF 3 | CITY OF AZTEC<br>PUBLIC WORKS DEPARTMENT |
|---|---|---|